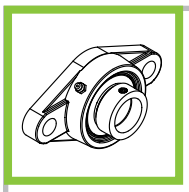

HCFJT 200 SERIES

Normal-Duty 2 Bolt Flange Block Eccentric Lock

TURNER®
Mounted Bearings

Available Seal Styles:

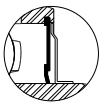

Standard

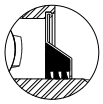

L3

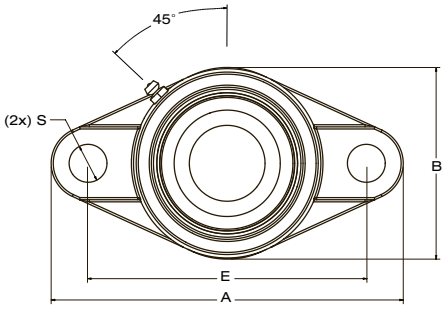

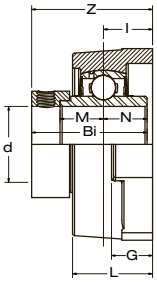

Bearing Number	Shaft Dia. d in. mm.	Dimensions in. mm. A	E	I	G	L	S	B	Z	Bi	N	M	Bolt Used in. mm.	Load Rating lbs. kN. Dynamic C_r	Static C_{or}	Bearing Insert	Housing Number	Weight lbs. kg.
HCWFJT 201	12	3.88 99.0	3.00 76.2	0.59 15.0	0.44 11.0	0.96 25.0	0.39 10.0	2.25 57.0	1.50 38.4	1.4685 37.3	0.5472 13.9	0.5472 13.9	5/16 M8	2,147 9.55	1,075 4.78	HCW 201	WFT 203	1.1 0.5
HCWFJT 201-8	1/2															HCW 201-8		
HCWFJT 202	15															HCW 202		
HCWFJT 202-10	5/8															HCW 202-10		
HCWFJT 203	17															HCW 203		
HCFJT 204-12	3/4	4.4 112.0	3.53 89.7	0.75 19.0	0.44 11.0	1.25 32.0	0.41 11.0	2.38 60.0	1.79 45.6	1.7205 43.7	0.6732 17.1	0.6732 17.1	5/16 M8	2,883 12.82	1,496 6.65	HC 204-12	FJT 204	1.3 0.6
HCFJT 204	20															HC 204		
HCFJT 205-14	7/8	4.88 124.0	3.89 98.8	0.75 19.0	0.50 13.0	1.31 33.4	0.47 12.0	2.75 70.0	1.81 46.0	1.7480 44.4	0.6850 17.4	0.6850 17.4	3/8 M10	3,155 14.04	1,810 8.05	HC 205-14	FJT 205	1.5 0.7
HCFJT 205-15	15/16															HC 205-15		
HCFJT 205	25															HC 205		
HCFJT 205-16	1															HC 205-16		
HCFJT 206-17	1 1/16	5.56 141.0	4.59 116.7	0.81 20.6	0.50 13.0	1.38 35.0	0.47 12.0	3.25 83.0	2.00 50.8	1.9055 48.4	0.7165 18.2	0.7165 18.2	3/8 M10	4,377 19.47	2,569 11.43	HC 206-17	FJT 206	2.2 1.0
HCFJT 206-18	1 1/8															HC 206-18		
HCFJT 206	30															HC 206		
HCFJT 206-19	1 3/16															HC 206-19		
HCFJT 206-20	1 1/4															HC 206-20		
HCFJT 207-20	1 1/4	6.13 156.0	5.13 130.2	0.84 21.4	0.59 15.0	1.47 37.3	0.51 13.0	3.75 95.0	2.13 53.7	2.0118 51.1	0.7402 18.8	0.7402 18.8	7/16 M12	5,775 25.69	3,497 15.56	HC 207-20	FJT 207	3.3 1.5
HCFJT 207-21	1 5/16															HC 207-21		
HCFJT 207-22	1 3/8															HC 207-22		
HCFJT 207	35															HC 207		
HCFJT 207-23	1 7/16															HC 207-23		
HCFJT 208-24	1 1/2	6.78 172.0	5.65 143.7	0.94 23.8	0.59 15.0	1.69 43.0	0.51 13.0	4.13 105.0	2.31 58.7	2.2165 56.3	0.8425 21.4	0.8425 21.4	7/16 M12	6,634 29.51	4,079 18.14	HC 208-24	FJT 208	4.6 2.1
HCFJT 208-25	1 9/16															HC 208-25		
HCFJT 208	40															HC 208		
HCFJT 209-26	1 5/8	7.06 179.0	5.84 148.4	0.94 23.8	0.59 15.0	1.75 44.5	0.63 16.0	4.38 111.0	2.31 58.7	2.2165 56.3	0.8425 21.4	0.8425 21.4	1/2 M14	7,160 31.85	4,676 20.80	HC 209-26	FJT 209	5.5 2.5
HCFJT 209-27	1 11/16															HC 209-27		
HCFJT 209-28	1 3/4															HC 209-28		
HCFJT 209	45															HC 209		
HCFJT 210-30	1 7/8	7.44 189.0	6.18 157.2	1.13 28.6	0.59 15.0	1.88 47.7	0.69 17.0	4.56 116.0	2.63 66.7	2.4685 62.7	0.9685 24.6	0.9685 24.6	1/2 M14	7,867 35.00	5,330 23.71	HC 210-30	FJT 210	5.9 2.7
HCFJT 210-31	1 15/16															HC 210-31		
HCFJT 210	50															HC 210		
HCFJT 210-32	2															HC 210-32		
HCFJT 211-32	2	8.50 216.0	7.25 184.2	1.25 31.8	0.83 21.0	2.00 50.3	0.71 18.0	5.25 133.0	2.97 75.5	2.8110 71.4	1.0906 27.7	1.0906 27.7	9/16 M16	9,743 43.34	6,608 29.40	HC 211-32	FJT 211	8.1 3.7
HCFJT 211-34	2 1/8															HC 211-34		
HCFJT 211	55															HC 211		
HCFJT 211-35	2 3/16															HC 211-35		
HCFJT 212-36	2 1/4	9.31 237.0	7.94 201.6	1.34 34.0	0.83 21.0	2.09 53.0	0.71 18.0	5.44 138.0	3.19 80.9	3.0630 77.8	1.2165 30.9	1.2165 30.9	9/16 M16	10,720 47.69	7,516 33.43	HC 212-36	FJT 212	10.6 4.8
HCFJT 212	60															HC 212		
HCFJT 212-38	2 3/8															HC 212-38		
HCFJT 212-39	2 7/16															HC 212-39		

Turner mounted bearings are a product of Baart Industrial Group (Baart). While Baart has tried to ensure the accuracy of the information contained in this document, Baart accepts no responsibility for inaccurate in, or changes to, such information. All rights reserved. ©2020